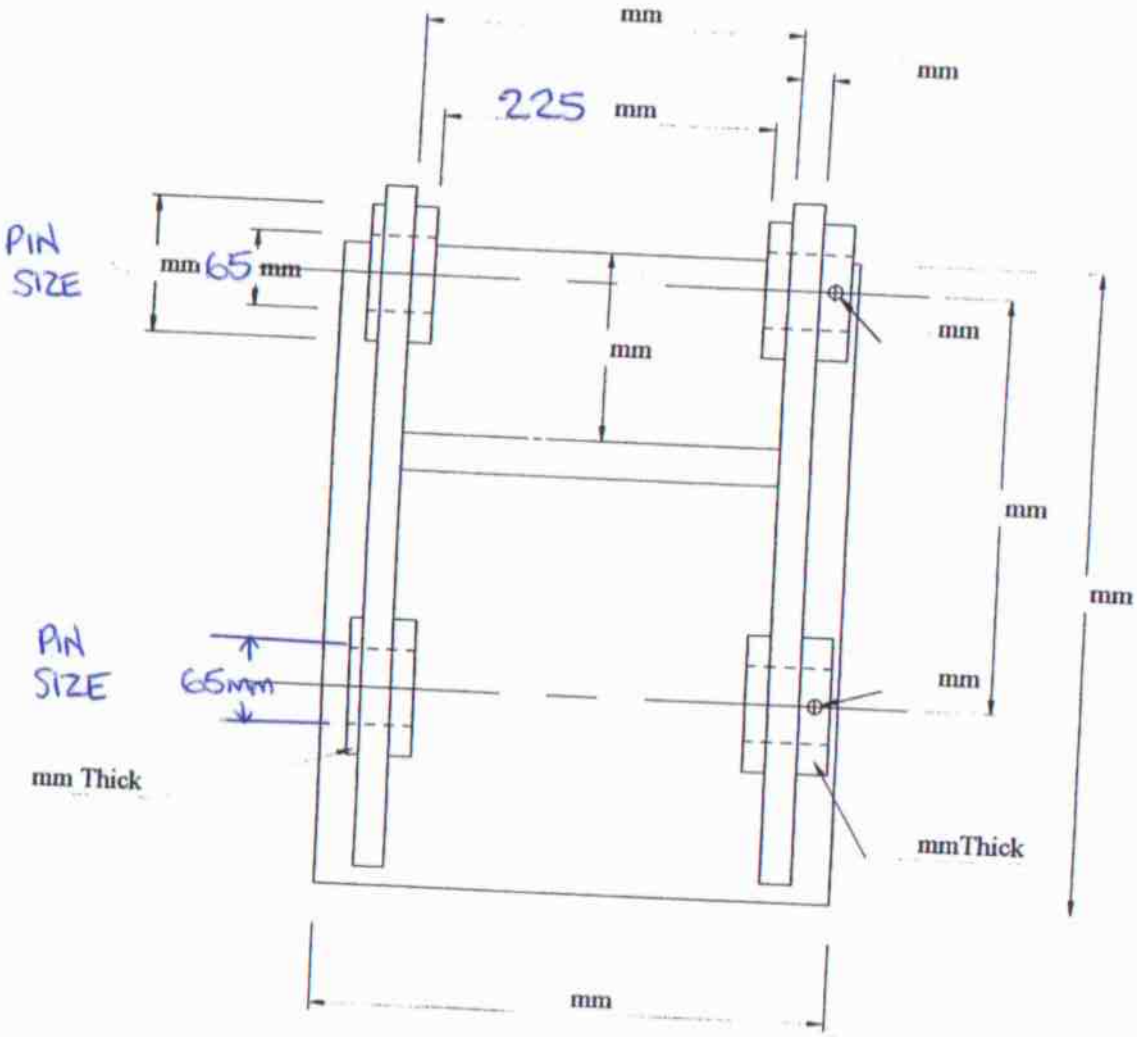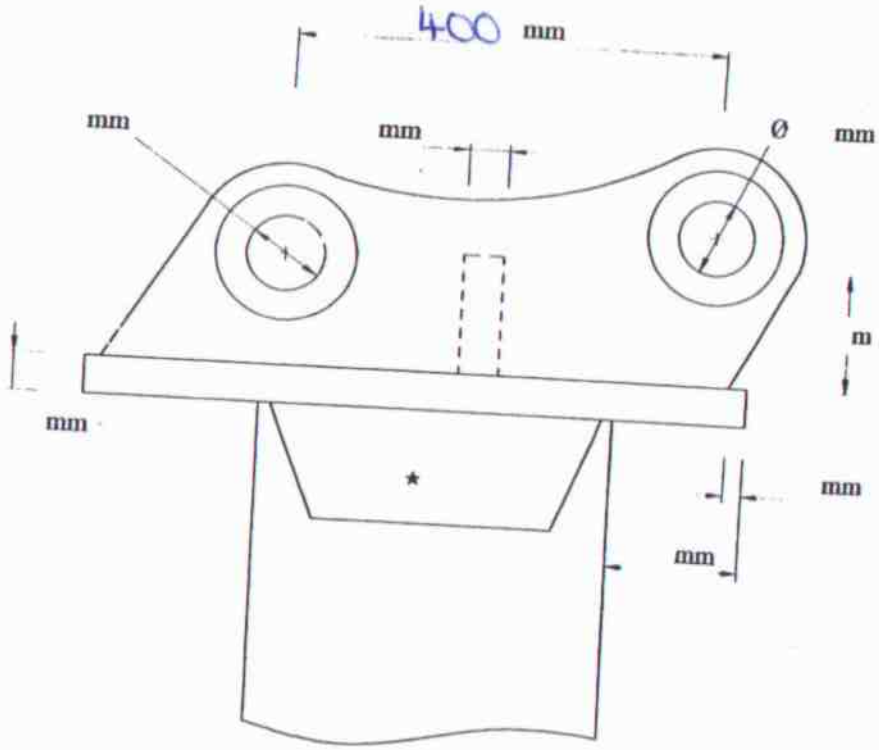CAT 312C - MUD BUCKET